CUSTOMER DATA

NAME_____

PHONE(___)_____

BOLT HOLES ☐ YES ☐ NO

_____ NUMBER

_____ SIZE

_____ B.C.

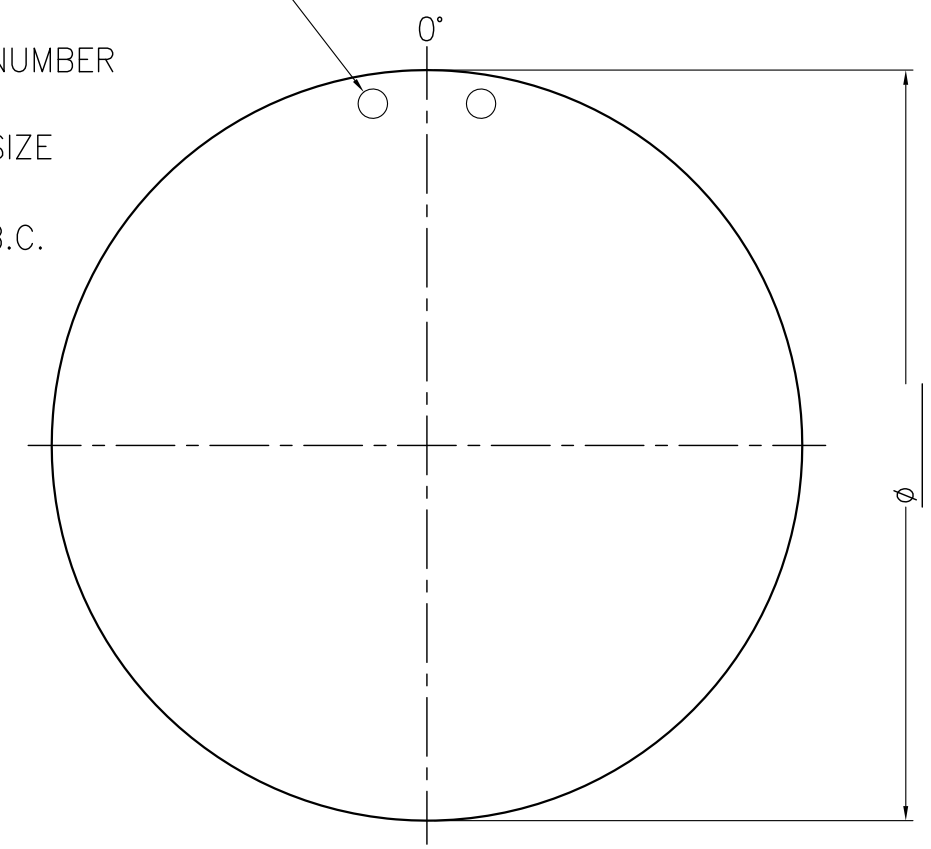

TUBESHEET DETAIL

DEFINE CONFINEMENT GROOVES IF APPLICABLE

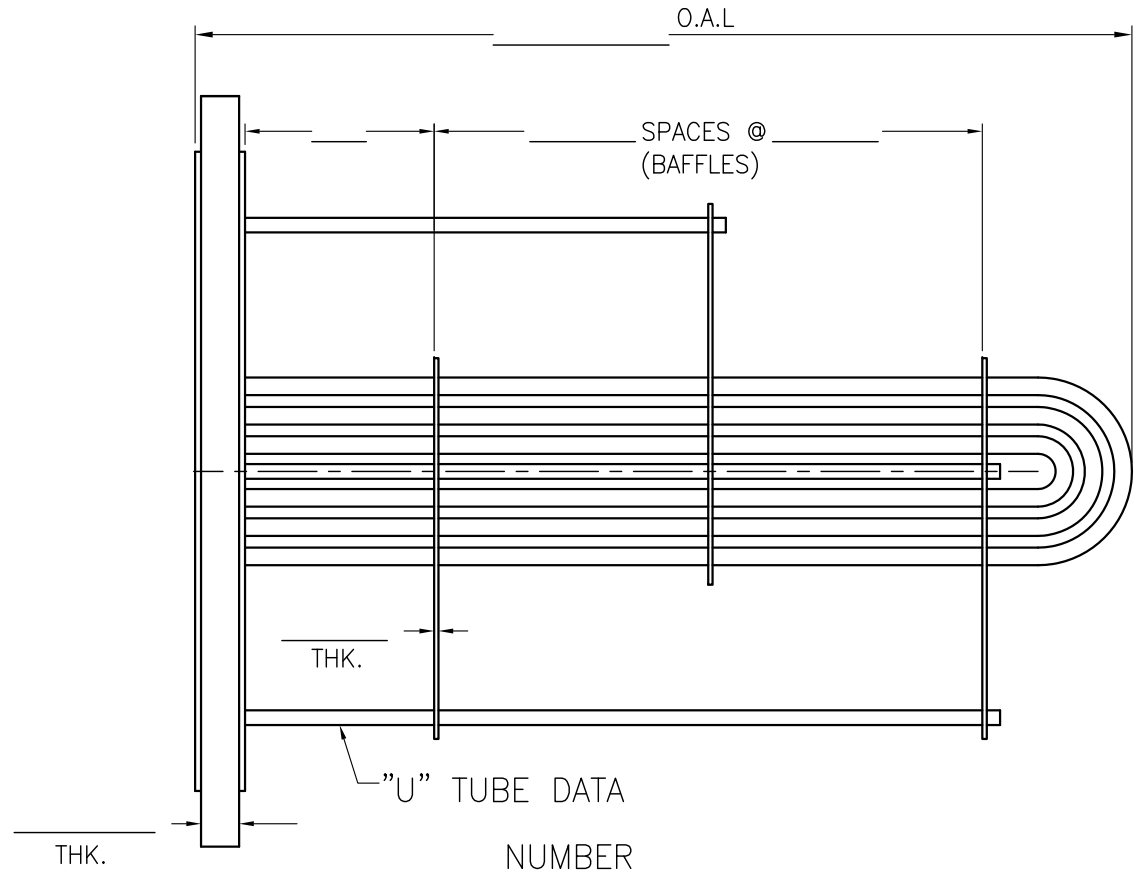

_____ NUMBER

_____ SIZE (OD)

_____ GAGE (THK.)

_____ PITCH ( )

_____ O.T.L (Ø)

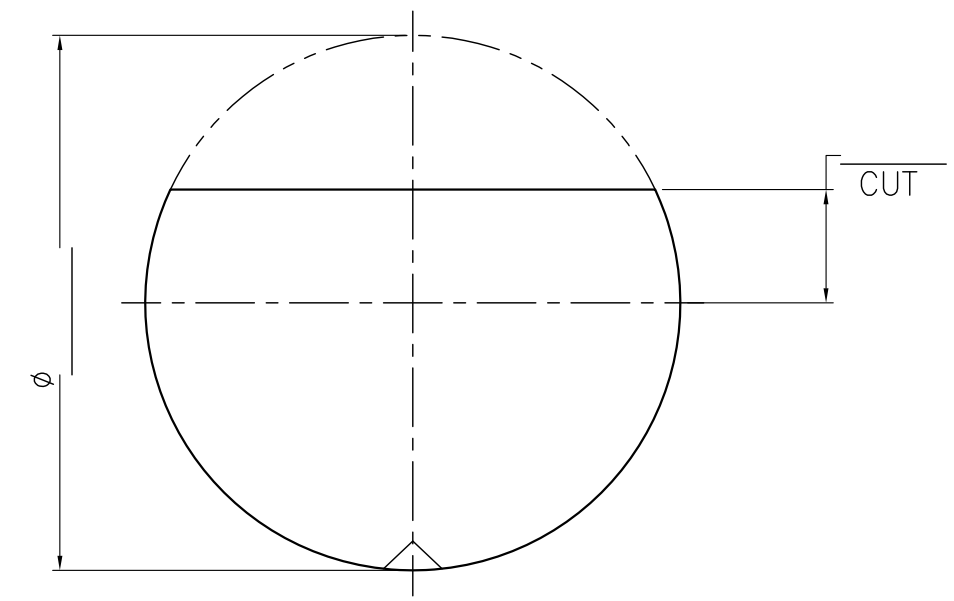

BAFFLE DETAIL

DEFINE 0°

DEFINE NOTCH

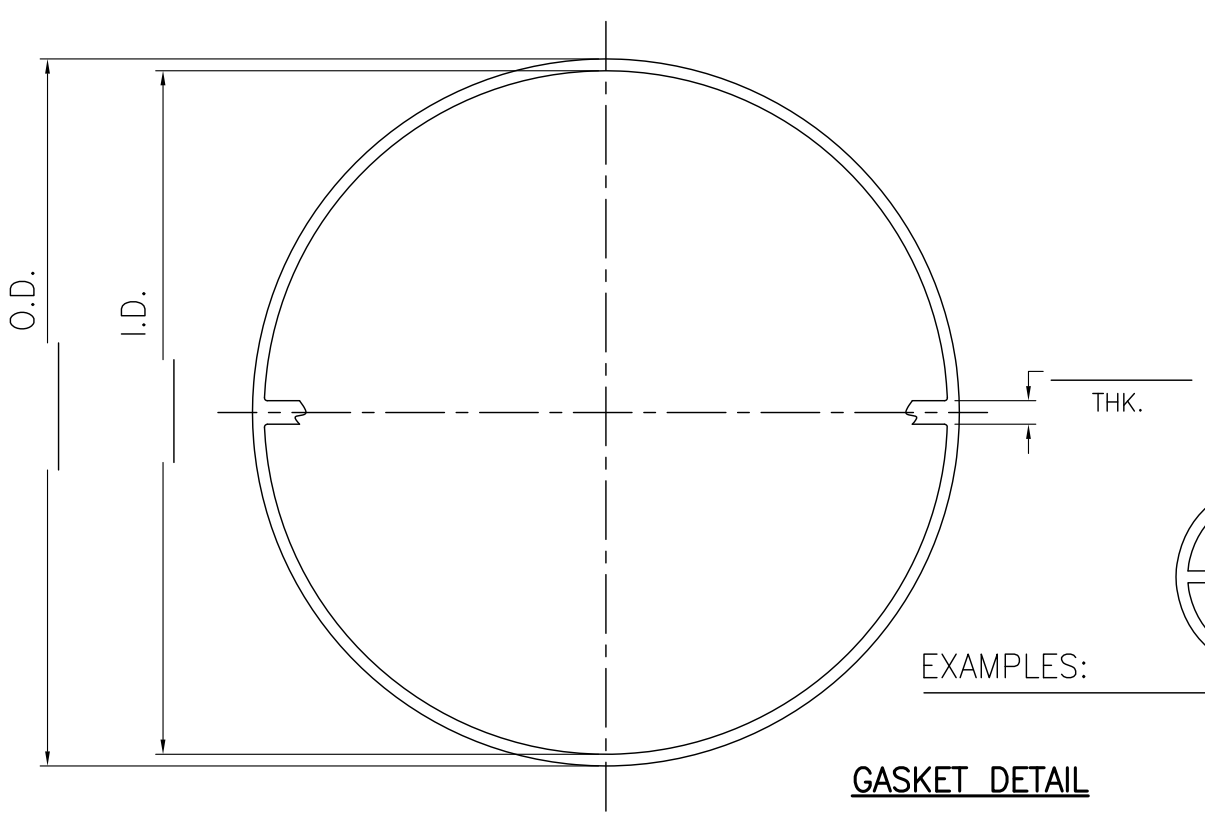

GASKET DETAIL

EXAMPLES:

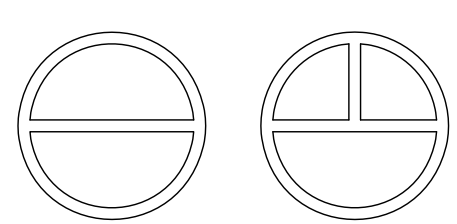

MATERIAL OF CONSTRUCTION:

TUBESHEET _____ TUBES _____

BAFFLES _____ TIE RODS _____

Comments:

TOLERANCES EXCEPT AS NOTED	HEAT EXCHANGER DESIGN, INC. Indy Used	
DECIMAL ±	P.O. BOX 524 Indianapolis, IN 46206 317-686-9000 Ph, 317-686-9100 Fx www.hed-inc.com	DRAWN BY / APPROVED BY
FRACTIONAL ±	TITLE U-TUBE BUNDLE DATA	
ANGULAR ±	DATE	DRAWING NUMBER